RCC INDUSTRIAL SOLUTIONS
FICOBA (Recinto Ferial Gipuzkoa)
AVDA.IPARRALDE, 43 - ROOM 3
20302 IRUN-GIPUZKOA (SPAIN)
00 34 646 211965
RCC@RCCINDUSTRIAL.COM
RCCINDUSTRIAL
WWW.RCCINDUSTRIAL.COM

PGF Single Stage Dimensions PGF單段外型尺寸圖

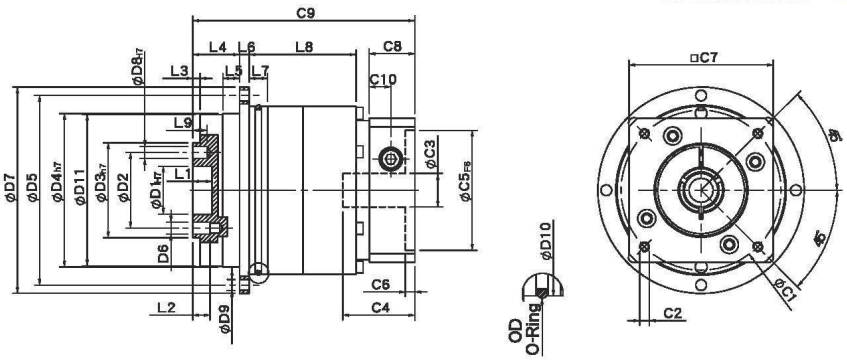

Specifications 規格

Unit:mm

尺寸 Dimensions	PGF42	PGF60	PGF90	PGF115
D1 H7	12	20	31.5	40
D2	20	31.5	50	63
D3 h7	28	40	63	80
D4 h7	47	64	90	110
D5	67	79	109	135
D6	M3x0.5P	M5x0.8P	M6x1.0P	M6x1.0P
D7	72	86	118	145
D8 H7	3	5	6	6
D9	3.4	4.5	5.5	5.5
D10	60	70	95	120
D11	46.2	63.2	89.2	109.2
L1	4	8	12	12
L2	6	7.2	12	13.5
L3	3	3	6	6
L4	19.5	19.5	29	29
L5	7	7	10	10
L6	4	4	7	8
L7	5	7.7	8	10
L8	25	29.5	35	50.5
L9	4	6	7	7
C1 [2]	46	70	90	115
C2 [2]	M4x0.7P	M5x0.8P	M6x1.0P	M8x1.25P
C3 [2]	≤8	≤14	≤19	≤24
C4 [2]	28.1	36.5	41.2	51.1
C5 [2] F6	30	50	70	95
C6 [2]	4	4	6.7	6
C7 [2]	42	60	90	115
C8 [2]	16.5	19	25.5	30
C9 [2]	74.8	84.5	104.5	127.5
C10 [2]	7.4	9	11.3	13.9
OD	56x2	66x2	90x3	110x3

★ C1~C9是公製標準馬達連接板尺寸,請依所選用的馬達決定.
★ 本公司有權針對以上數據規格進行設計變更不先行告知.
★ C1~C9 are motor specific dimensions(metric std shown), Size may vary according to the motor flange chosen.
★ Specification subject to change without notice.

PGF Double Stage Dimensions-1 PGF雙段外型尺寸圖-1

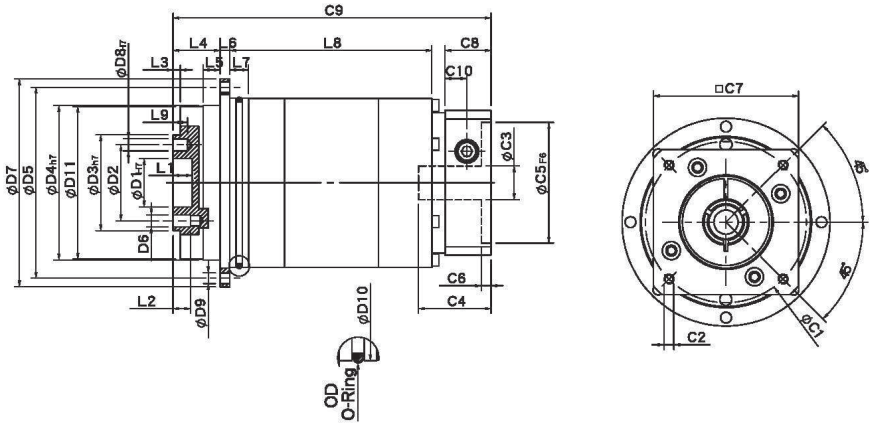

Specifications 規格

Unit:mm

尺寸 Dimensions	PGF42	PGF60	PGF90	PGF115
D1H7	12	20	31.5	-
D2	20	31.5	50	-
D3h7	28	40	63	-
D4h7	47	64	90	-
D5	67	79	109	-
D6	M3x0.5P	M5x0.8P	M6x1.0P	-
D7	72	86	118	-
D8H7	3	5	6	-
D9	3.4	4.5	5.5	-
D10	60	70	95	-
D11	46.2	63.2	89.2	-
L1	4	8	12	-
L2	6	7.2	12	-
L3	3	3	6	-
L4	19.5	19.5	29	-
L5	7	7	10	-
L6	4	4	7	-
L7	5	7.7	8	-
L8	54.5	68.5	80	-
L9	4	6	7	-
C1 [2]	46	70	90	-
C2 [2]	M4x0.7P	M5x0.8P	M6x1.0P	-
C3 [2]	≤8	≤14	≤19	-
C4 [2]	28.1	36.5	41.2	-
C5 [2] F6	30	50	70	-
C6 [2]	4	4	6.7	-
C7 [2]	42	60	90	-
C8 [2]	16.5	19	25.5	-
C9 [2]	102.5	123.5	148.6	-
C10 [2]	7.4	9	11.3	-
OD	56x2	66x2	90x3	-

★ C1~C9是公製標準馬達連接板尺寸,請依所選用的馬達決定.
★ 本公司有權針對以上數據規格進行設計變更不先行告知.
★ C1~C9 are motor specific dimensions(metric std shown), Size may vary according to the motor flange chosen.
★ Specification subject to change without notice.

PGF Double Stage Dimensions-2 PGF雙段外型尺寸圖-2

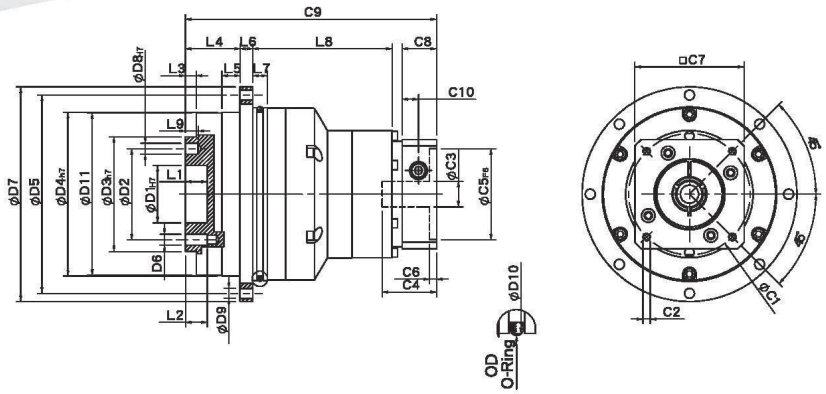

Specifications 規格

Unit:mm

尺寸 Dimensions	PGF60T	PGF90T	PGF115T
D1 H7	20	31.5	40
D2	31.5	50	63
D3 h7	40	63	80
D4 h7	64	90	110
D5	79	109	135
D6	M5x0.8P	M6x1.0P	M6x1.0P
D7	86	118	145
D8 H7	5	6	6
D9	4.5	5.5	5.5
D10	70	95	120
D11	63.2	89.2	109.2
L1	8	12	12
L2	7.2	12	13.5
L3	3	6	6
L4	19.5	29	29
L5	7	10	10
L6	4	7	8
L7	7.7	8	10
L8	61.2	68	89.5
L9	6	7	7
C1 [2]	46	70	90
C2 [2]	M4x0.7P	M5x0.8P	M6x1.0P
C3 [2]	≤8	≤14	≤19
C4 [2]	28.1	36.5	41.2.1
C5 [2] F6	30	50	70
C6 [2]	4	4	6.7
C7 [2]	42	60	90
C8 [2]	16.5	19	25.5
C9 [2]	109.2	135.5	159.1
C10 [2]	7.4	9	11.3
OD	66x2	90x3	110x3

★ C1~C9是公製標準馬達連接板尺寸,請依所搭用的馬達決定.
★ 本公司有權針對以上數據規格進行設計變更不先行告知.

★ C1~C9 are motor specific dimensions(metric std shown), Size may vary according to the motor flange chosen.
★ Specification subject to change without notice.

PGF Flange Dimensions PGF法蘭面尺寸圖

PGF42

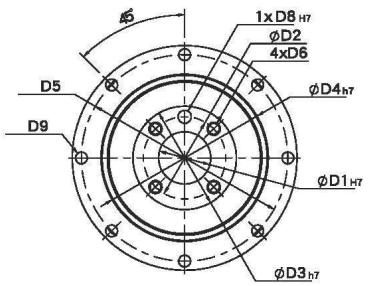

PGF60
PGF90

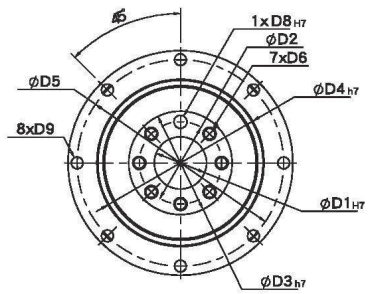

PGF115

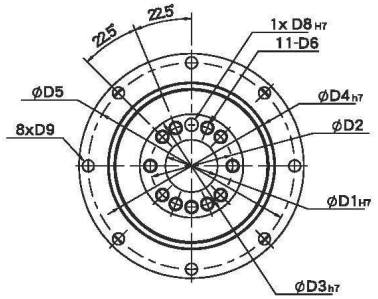

Specifications 規格

Unit:mm

尺寸 Dimensions	PGF42	PGF60	PGF90	PGF115	PGF142
D1 H7	12	20	31.5	40	-
D2	20	31.5	50	63	-
D3 h7	28	40	63	80	-
D4 h7	47	64	90	110	-
D5	67	79	109	135	-
D6	M3x0.5P	M5x0.8P	M6x1.0P	M6x1.0P	-
D8 H7	3	5	6	6	-
D9	3.4	4.5	5.5	5.5	-

★ 本公司有權針對以上數據規格進行設計變更不先行告知.
★ Specification subject to change without notice.